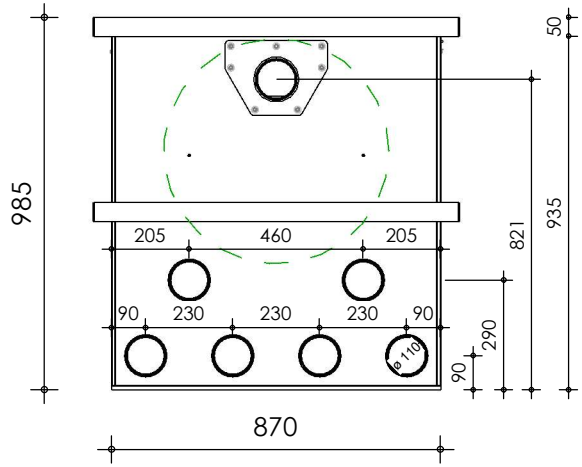

Front view

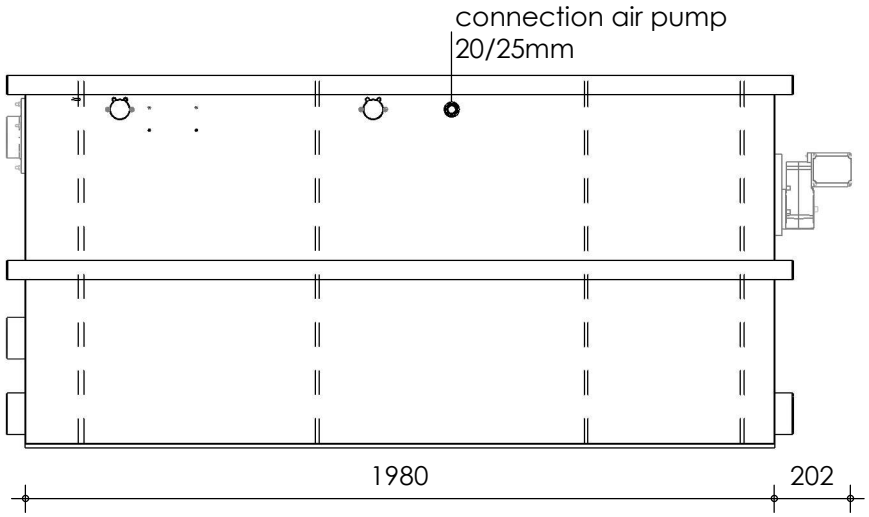

Right-side view

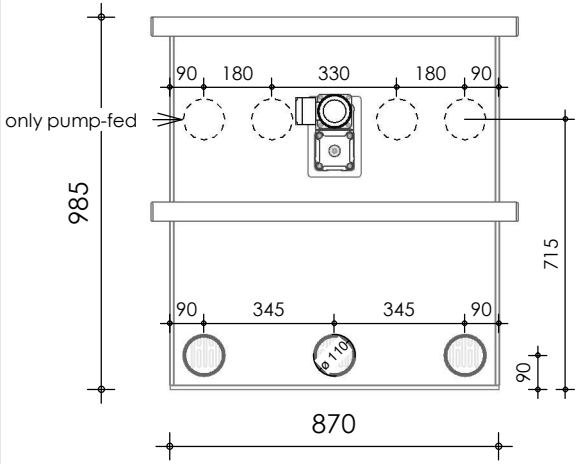

Rear view

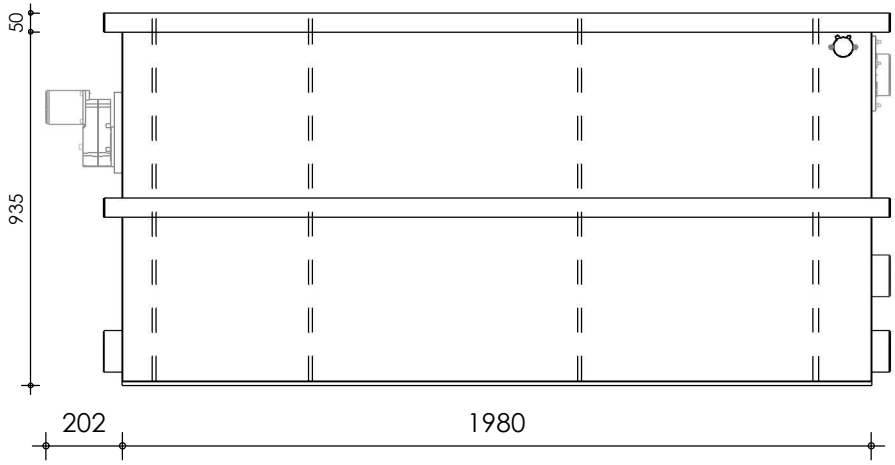

Left-side view

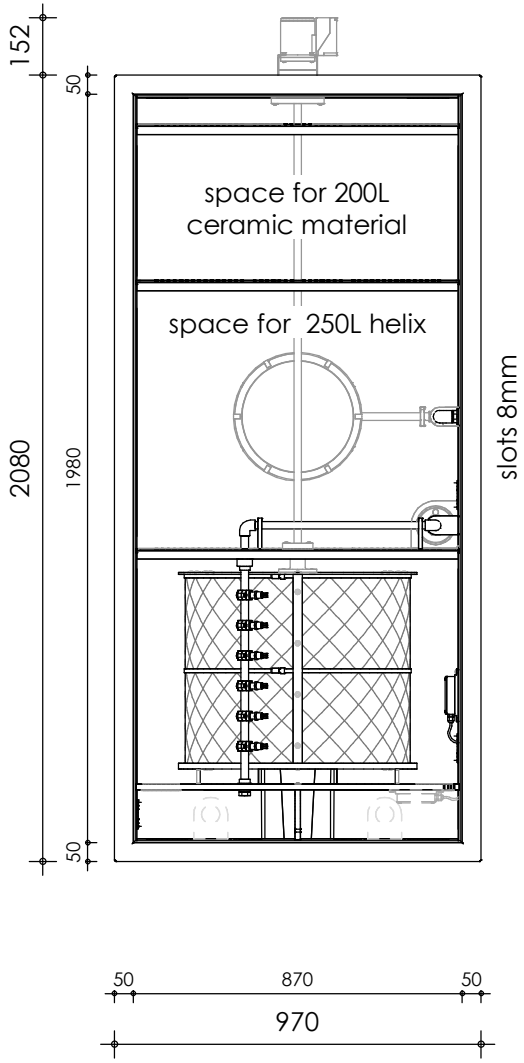

Top view

description:	scale :	date/version :	water running height :
CL65-K - Combi filter	1 : 20	v.3	120 mm

DVS FILTERTECHNIEK